5 Shear Center and Shear Flow

5.1 Definitions
- Bending Axis and Shear Center

5.2 Shear Flow Due to Transverse Loading in Thin-Walled Cross Sections
- Approximations for Shear in Thin-Walled Beams

5.3 Location of Shear Center

5.4 Example - Channel Cross Section

Definitions

Bending Axis. Longitudinal axis through which transverse bending loads must pass in order that bending shall not be accompanied by twisting of the beam.

Shear center is the point of intersection of the bending axis and the plane of the transverse section.

Bending axis - locus of shear centers

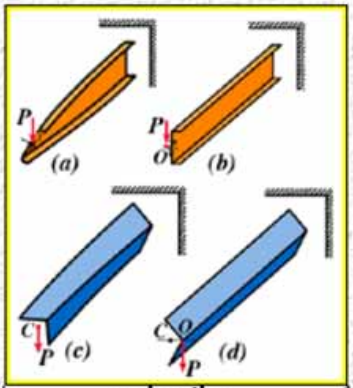

animation

Importance

Thin-walled beams (with I, channel, angle and Z sections) offer large resistance to bending, but small resistance to torsion.

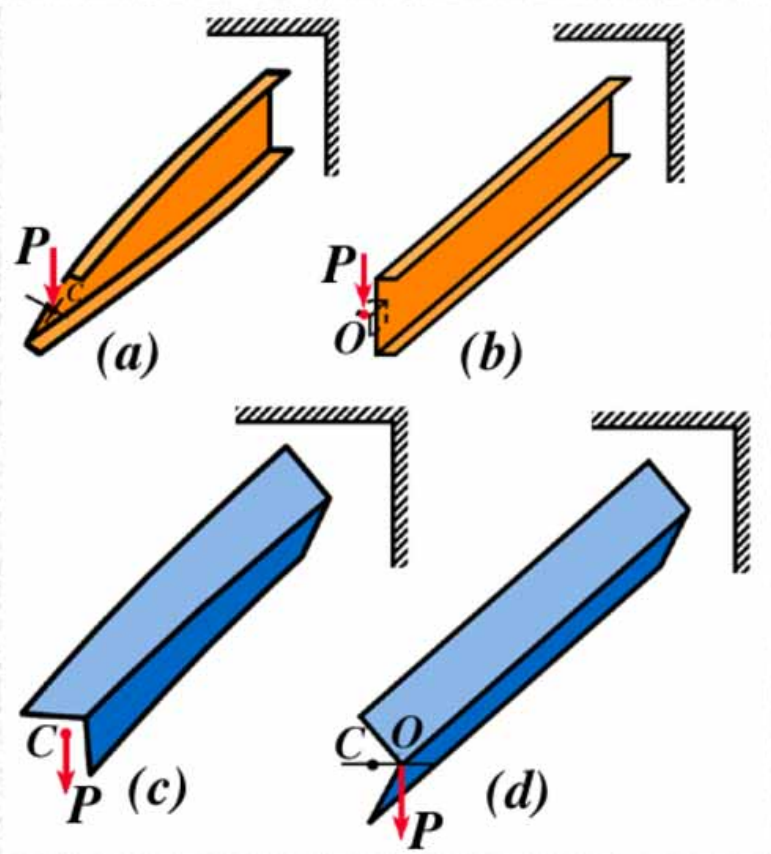

Definitions

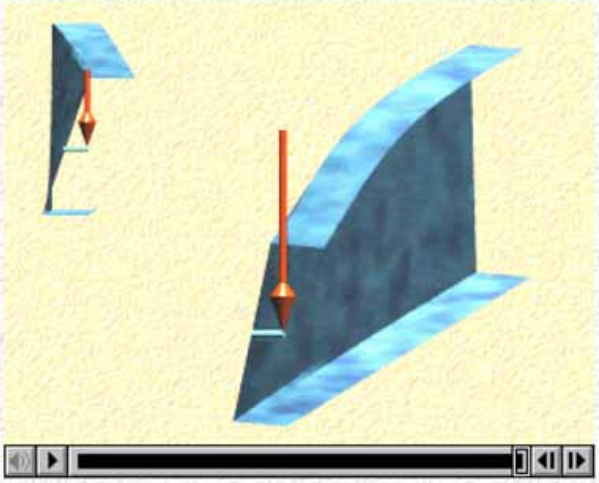

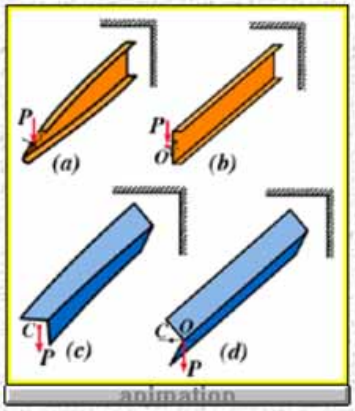

Definitions

Case of Eccentric Normal Force

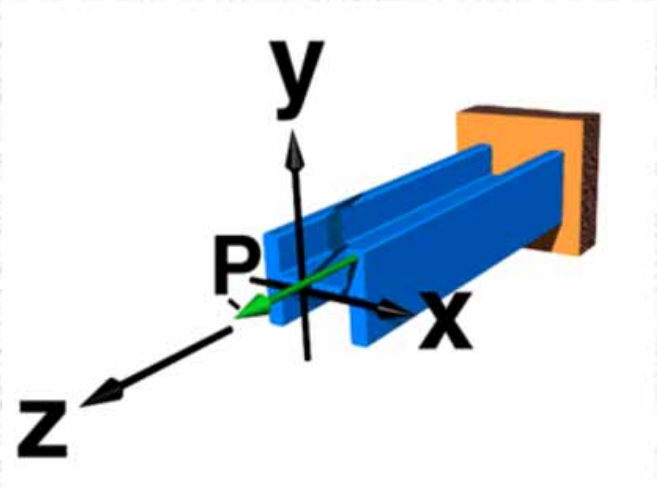

=

Definitions

=

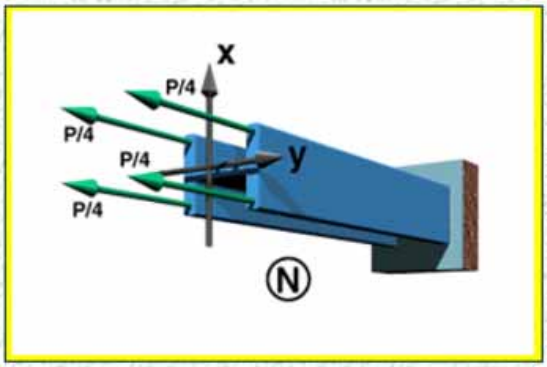

+

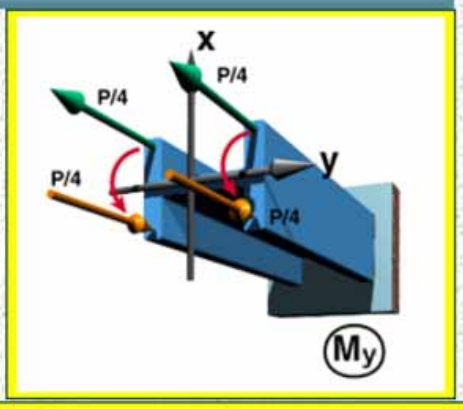

+

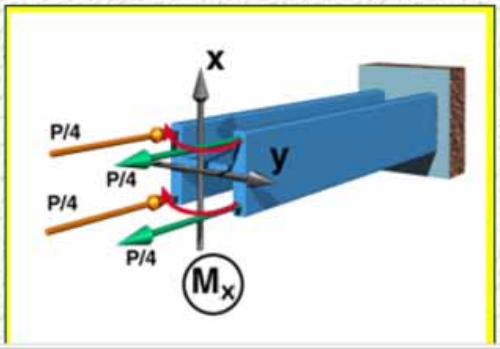

+

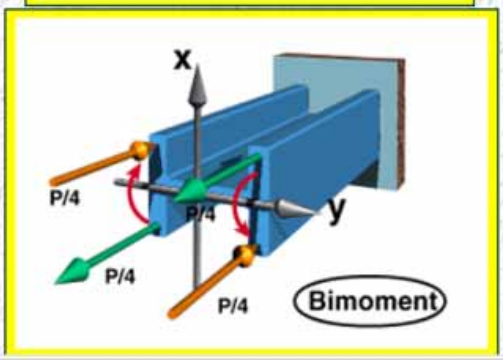

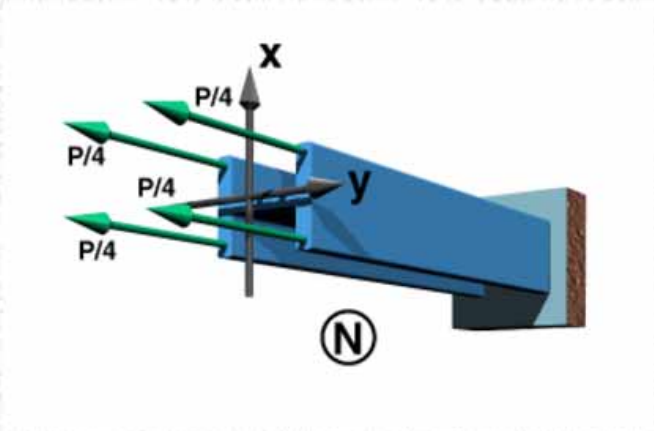
x
P/4
P/4
P/4
y
P/4
N

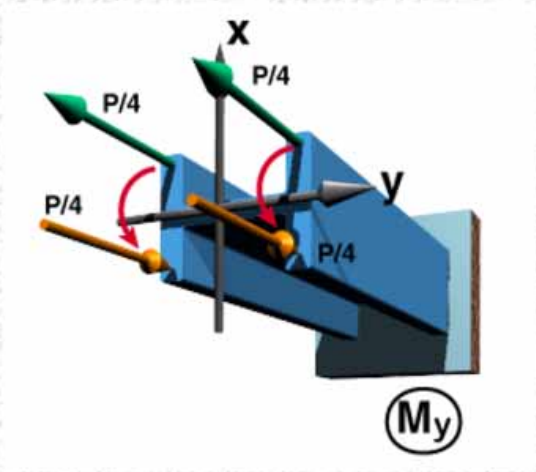
x
P/4
P/4
y
P/4
P/4
My

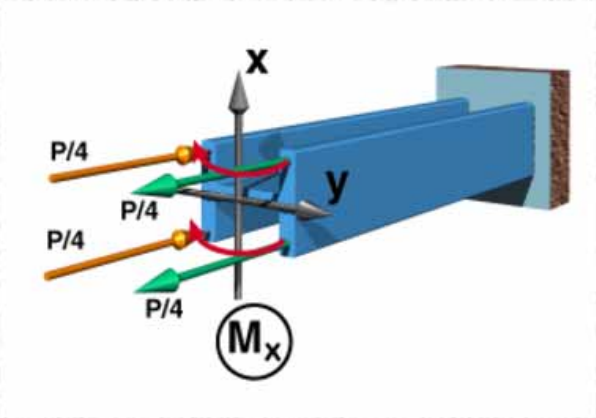
x
y
P/4
P/4
P/4
P/4
M_x

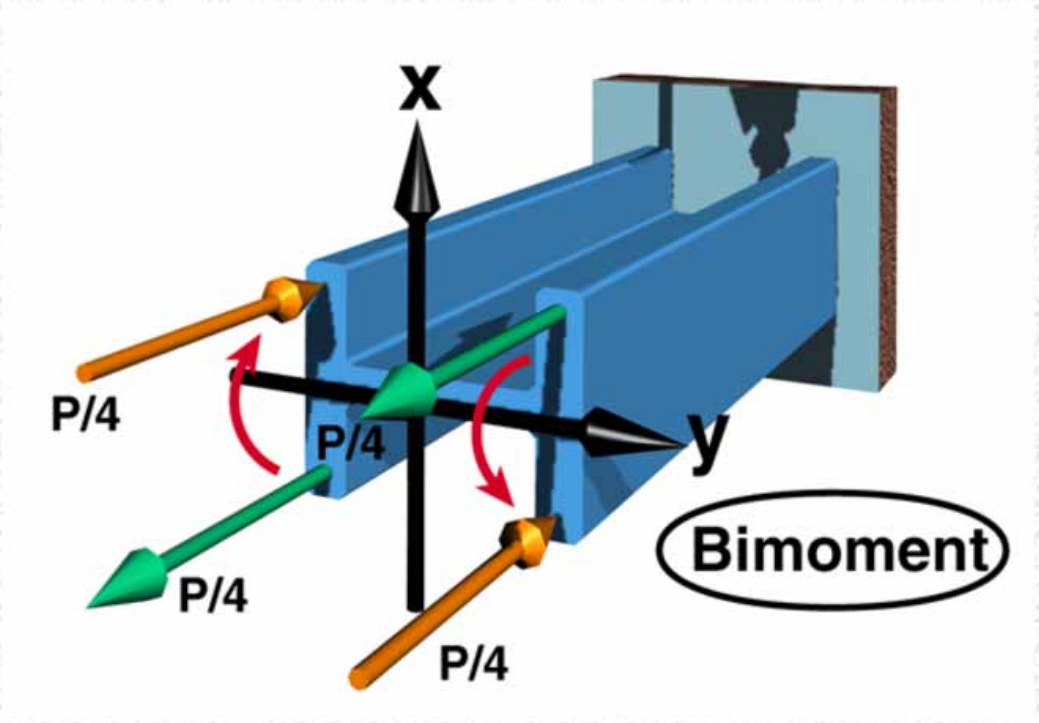
x
y
P/4
P/4
P/4
P/4
Bimoment

Shear Flow Due to Transverse Loading in Thin-Walled Cross Sections

Assumptions

Shear stresses are tangent to the wall of the cross section and are uniform through the wall thickness.

Shear flow $q = \tau t$
τ = shear stress
t = wall thickness

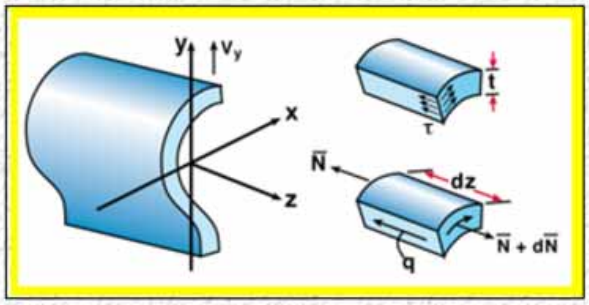

Equilibrium of a beam segment

$$d\bar{N} = q\,dz \quad \text{or} \quad \frac{d\bar{N}}{dz} = q$$

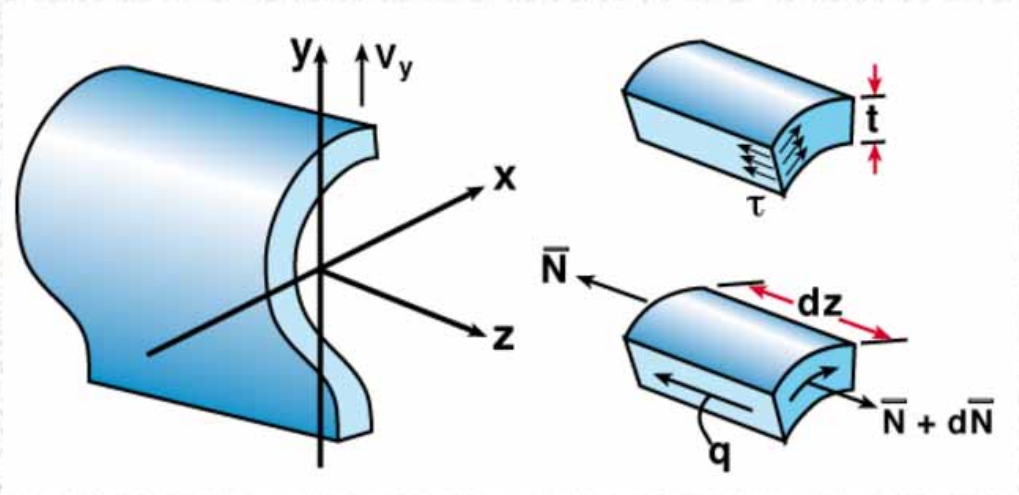

Shear Flow Due to Transverse Loading in Thin-Walled Cross Sections

Equilibrium of a beam segment

$$d\bar{N} = q\,dz \quad \text{or} \quad \frac{d\bar{N}}{dz} = q$$

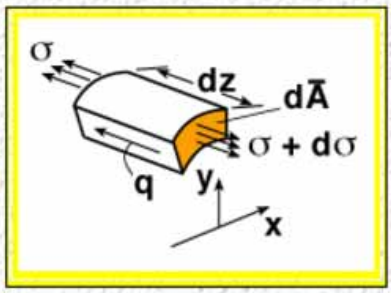

where

$$\bar{N} = \int_{\bar{A}} \sigma \, d\bar{A}$$

$$= \frac{M_x}{I_x} \int_{\bar{A}} y \, d\bar{A}$$

$$= \frac{M_x}{I_x} \bar{S}_x$$

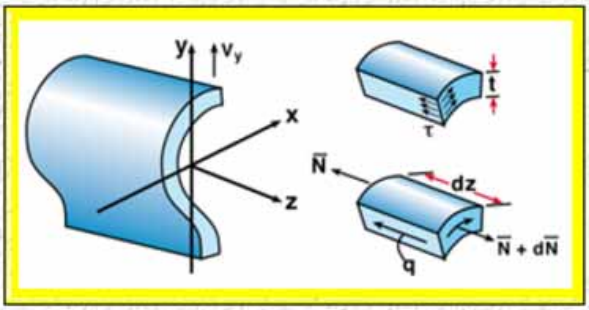

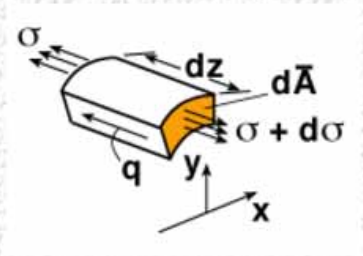

Shear Flow Due to Transverse Loading in Thin-Walled Cross Sections

Therefore, for beams with uniform cross section

$$q = \frac{d\bar{N}}{dz} = \frac{V_y}{I_x}\bar{S}_x$$

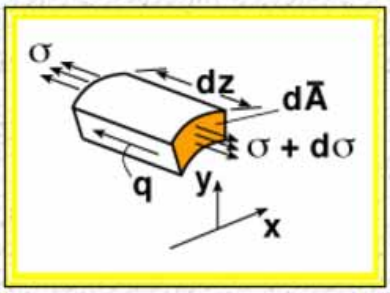

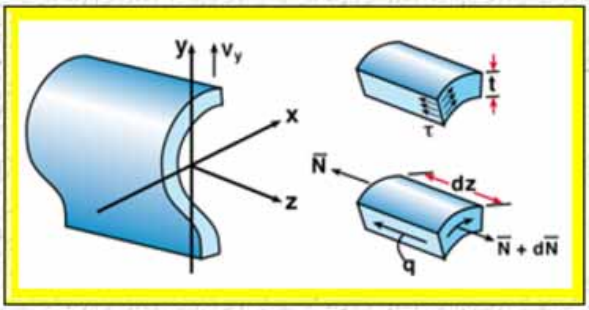

Location of Shear Center

For doubly-symmetric cross sections Shear center and centroid coincide.

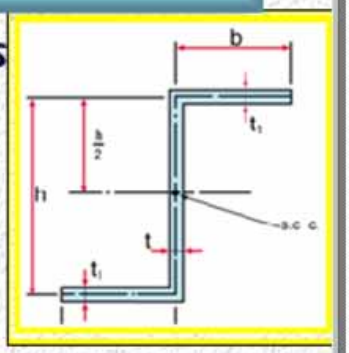

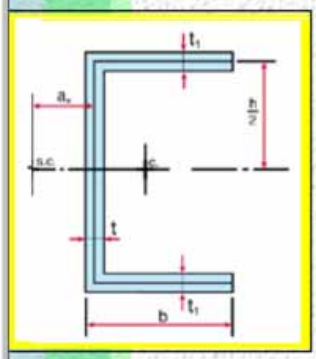

For cross sections with one axis of symmetry, shear center lies on axis of symmetry but not coincident with centroid.

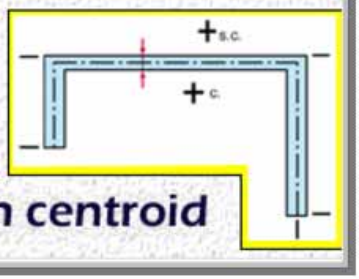

For unsymmetric cross sections shear center is not coincident with centroid

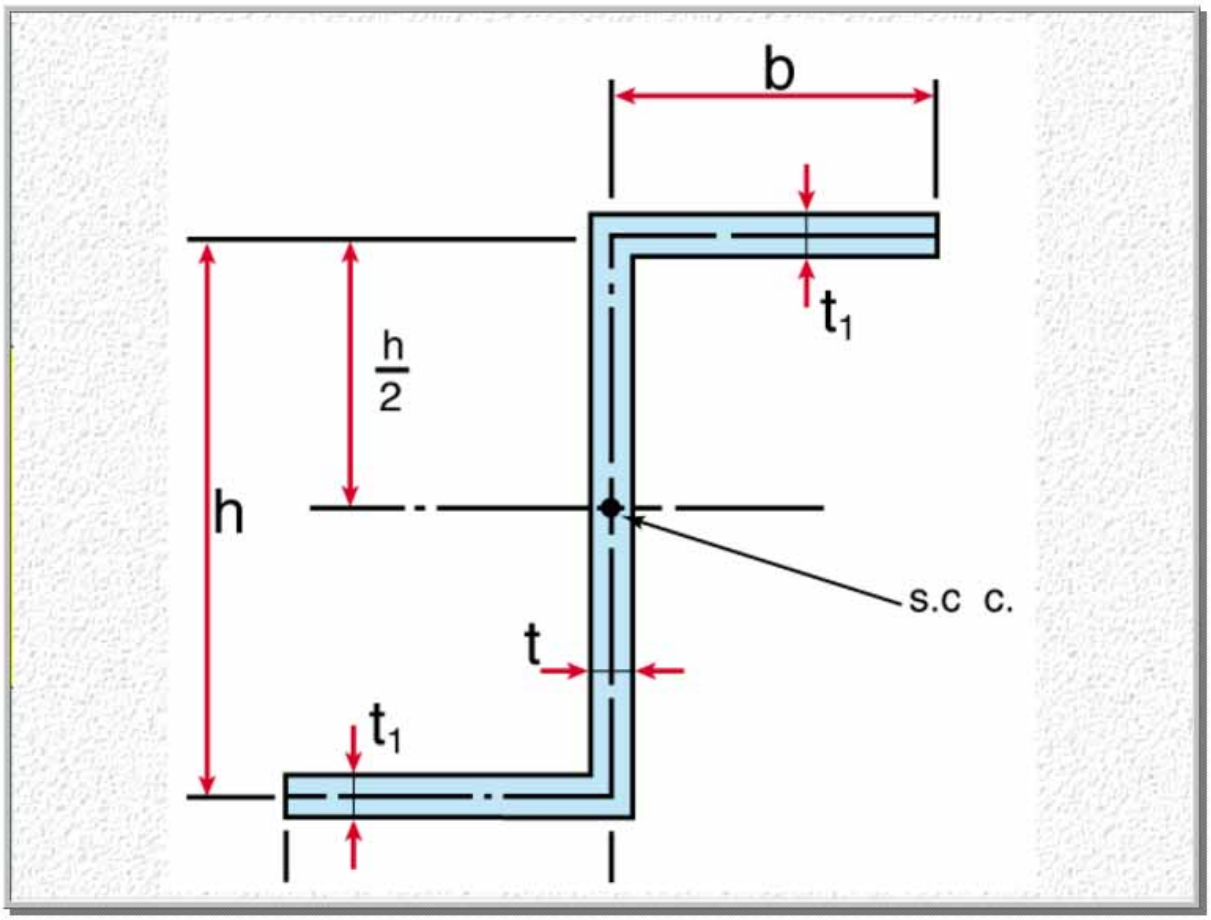
b
t1
h/2
h
s.c c.
t
t1

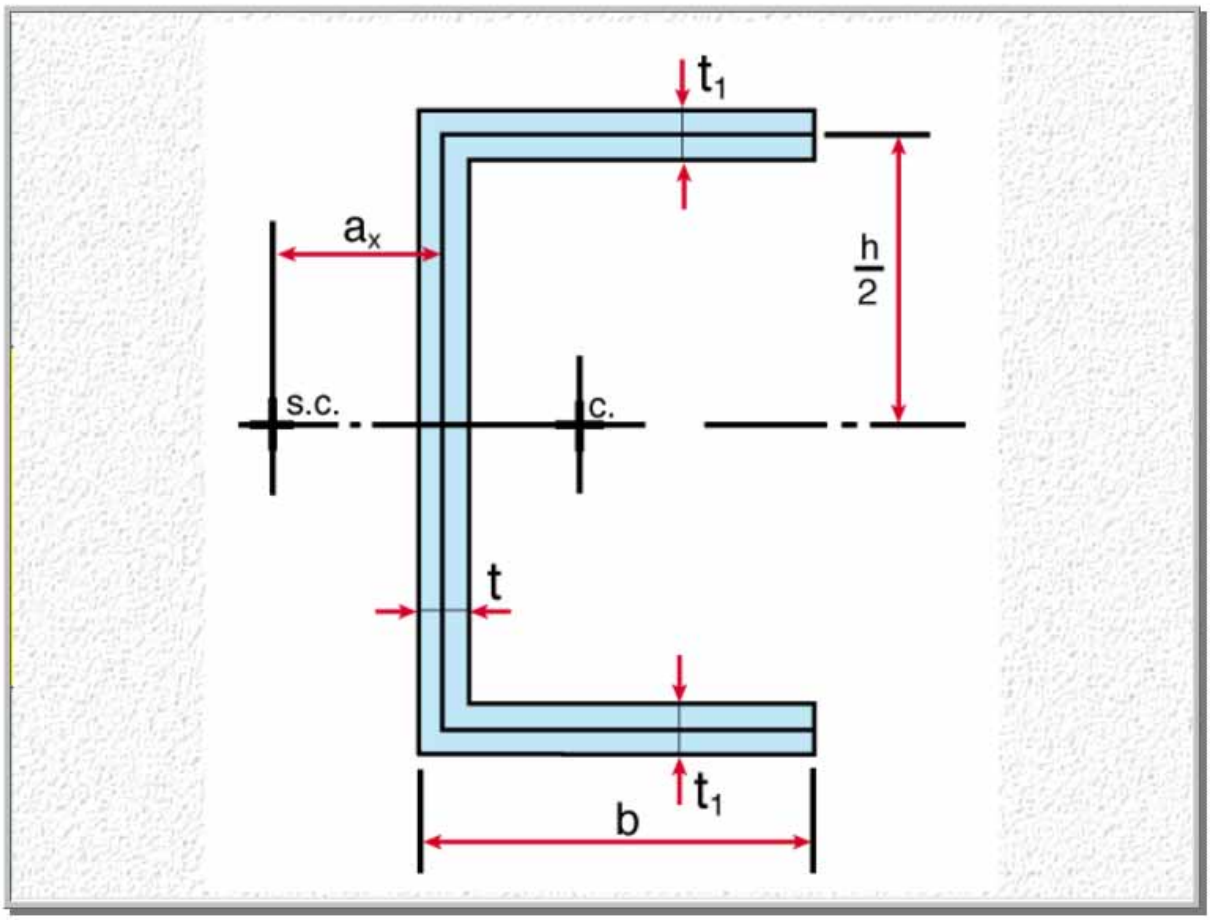
t1
ax
h/2
s.c.
c.
t
t1
b

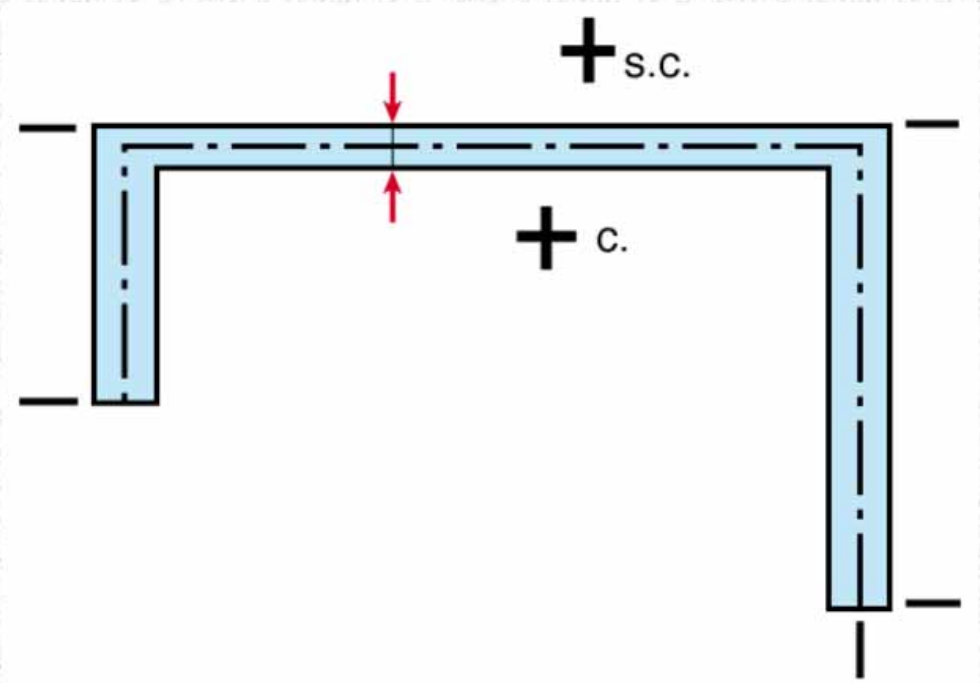

Example - Channel Cross Section

Case of transverse loading - shearing force V_y

$$I_x = 2\left[\frac{1}{12}\,b(t_f)^3 + b\,t_f\left(\frac{h}{2}\right)^2\right] + t_w\,\frac{h^3}{12}$$

Shear flow in top flange

$$q = \frac{V_y}{I_x}\,\bar{S}_x$$

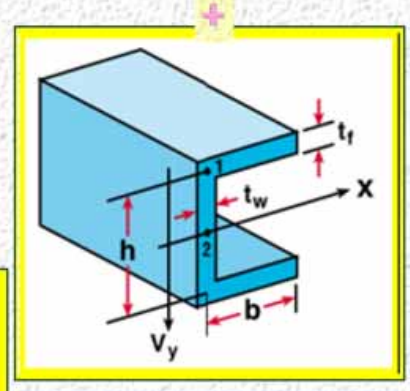

where

$$\bar{S}_x = \zeta\,t_f\,\frac{h}{2}$$

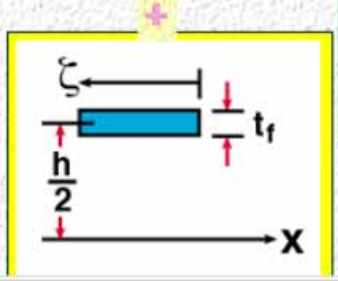

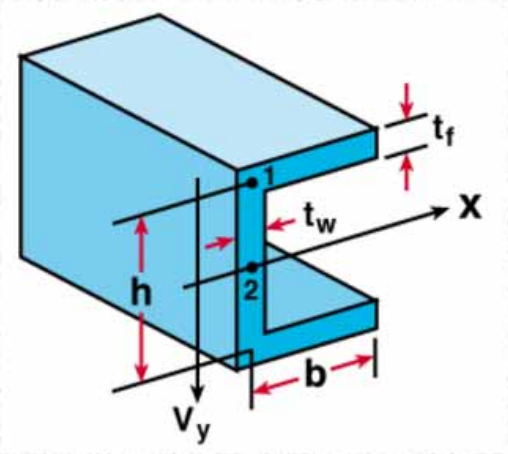
t_f
1
t_w
x
h
2
b
V_y

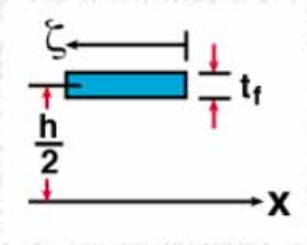
ζ
t_f
$\frac{h}{2}$
x

Example - Channel Cross Section

At point 1

$$q_1 = \frac{V_y}{I_x} t_f \frac{h}{2} b$$

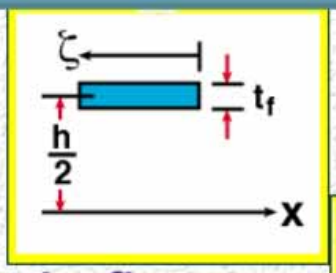

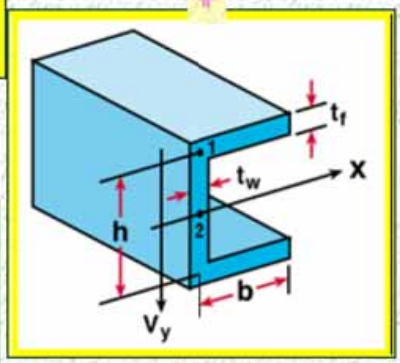

Total shear force in the flange

$$P_h = q_1 \frac{b}{2}$$

$$= \frac{V_y}{I_x} t_f \frac{h\, b^2}{4}$$

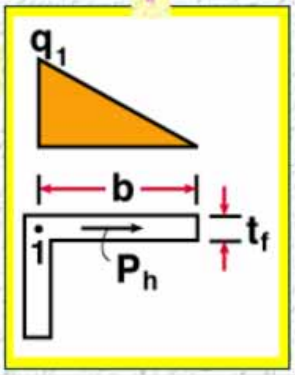

Shear flow in web

$$q = \frac{V_y}{I_x} \bar{S}_x$$

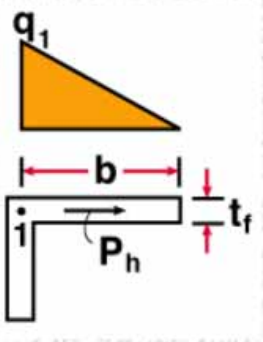

Example - Channel Cross Section

Shear flow in web

$$q = \frac{V_y}{I_x}\bar{S}_x$$

where

$$\bar{S}_x = b\,t_f\,\frac{h}{2} + t_w\,\zeta\left(\frac{h}{2} - \frac{\zeta}{2}\right)$$

At point 2,

$$\bar{S}_x = b\,t_f\,\frac{h}{2} + t_w\,\frac{h^2}{8}$$

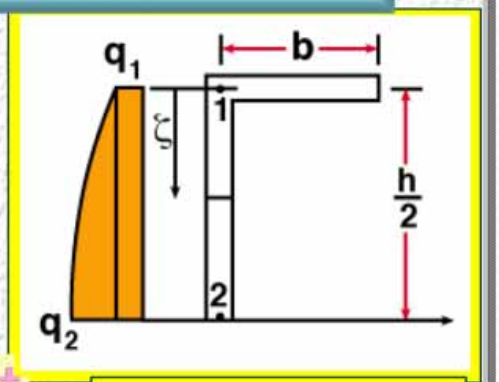

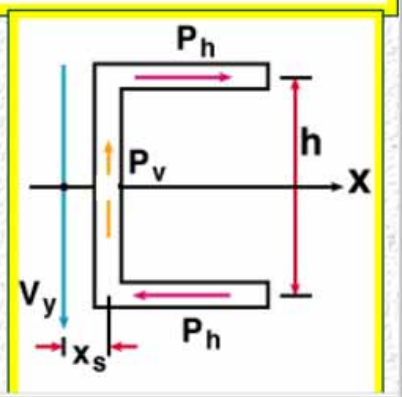

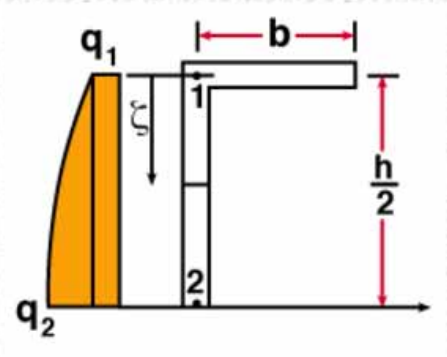

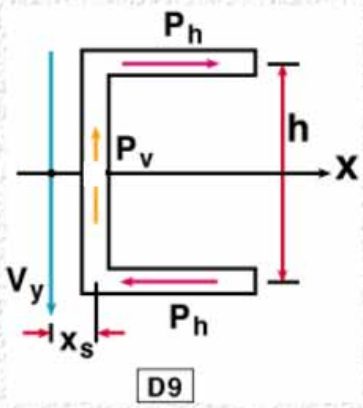

Example - Channel Cross Section

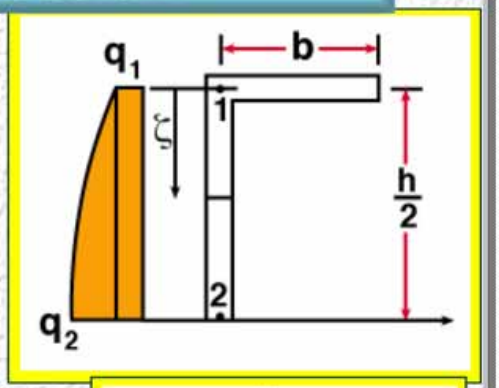

Total shear force in the web

$$P_v = \frac{V_y}{I_x}\left[b\, t_f \frac{h}{2}\cdot h + \frac{2}{3}\, t_w \frac{h^2}{8}\cdot h\right]$$

$$= \frac{V_y}{I_x}\left(t_f\, b \frac{h^2}{2} + \frac{1}{12}\, t_w\, h^3\right)$$

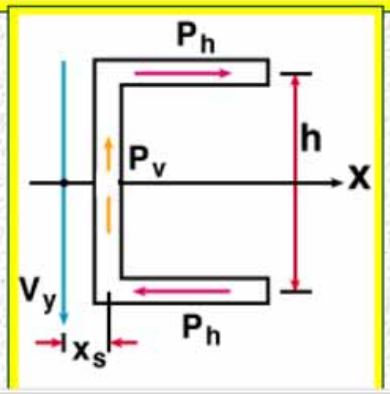

Example - Channel Cross Section

Location of shear center

- Equilibrium between shearing force and shear flow

$$P_h \cdot h = P_v \cdot x_s$$

$$x_s = \frac{P_h}{P_v} \cdot h$$
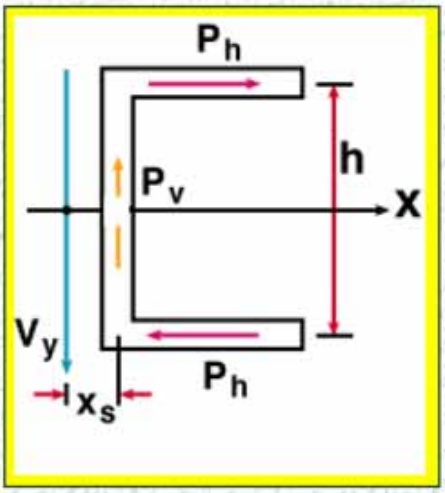
$$= \frac{b}{2 + \frac{1}{3}\frac{t_w}{t_f}\frac{h}{b}}$$